Grommet Cover

SKU: ACC011

Specifications

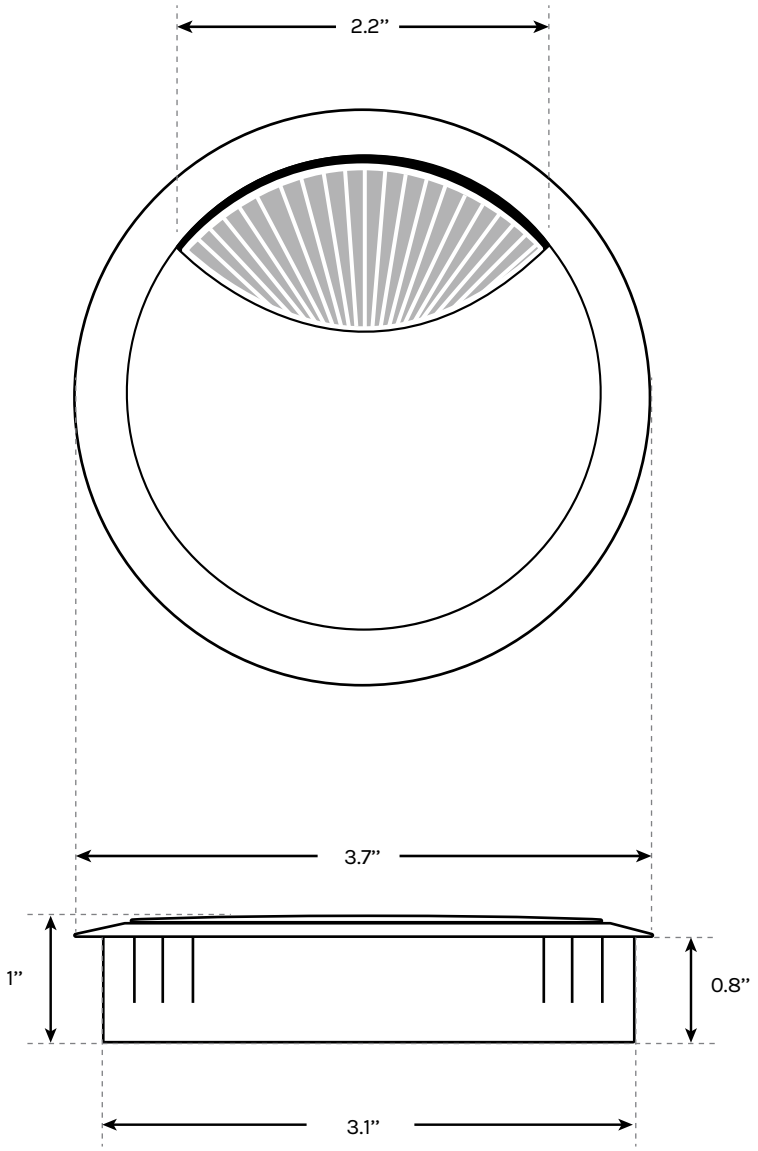

Fits Grommet Holes	3.15” (80 mm) diameter
Material	Molded plastic
Color	Black, Gray, White
Warranty	15 year

For a more in-depth look at this product, see our product video at http://bit.ly/2FuAcrx

For technical questions and support call **800-349-3839**, email **info@upliftdesk.com**, or visit our chat service at **upliftdesk.com**